Technical sheet

MRT 3050 PRIVILEGE PLUS

Rotating Telehandlers

MANITOU
HANDLING YOUR WORLD

Capacities	Metric
Max. capacity	4999 kg
Max. lift height	29.50 m
Max. reach	25.80 m
Dimensions	
l2 - Length to fork heel	7.82 m
l1 - Overall length	9.02 m
b1 - Overall machine width	2.49 m
b7 - Overall width with stabilisers extended	6.25 m
h17 - Overall height	3.05 m
Wa3 - - Frame outer turning radius	6.50 m
m4 - Machine ground clearance	0.35 m
a4 - Tilt-up angle	12.30 °
a5 - Tilt-down angle	108.70 °
Standard tyres	Pneumatic
Standard forks	1200 x 130 x 45
Weight	21810 kg
Stabilisers	
Type	Telescopic Duplex
Controls	Individual or Simultaneous
Engine	
Brand	Mercedes
Environmental standards	OM 934 E4-5 - Stage 4 / Final Tier 4
Power	176 hp / 129 kW
Max. torque	750 Nm at 1500 rpm
Number of cylinders - Capacity	4 - 5130 cm^3
Injection	Direct
Cooling	by Water
Transmission	
Type	Hydrostatic
Drawbar pull	9500 daN
Parking brake	Automatic negative parking brake
Service brake	Hydraulic
Hydraulics	
Type of pump	Variable Flow
Hydraulic flow rate	180 l/min
Pressure	350 bar
Tank capacities	
Hydraulic oil	290 l
Fuel	290 l
AdBlue Diesel Exhaust Fluid (DEF)	57 l
Noise & vibration	
Noise at driving position (LpA)	79.70 dB(A)
Noise to environment (LwA)	108 dB(A)
Vibration on hands/arms	<2.50 m/s^2

Dimensional drawing

Created on August 29, 2019 1:02 PM

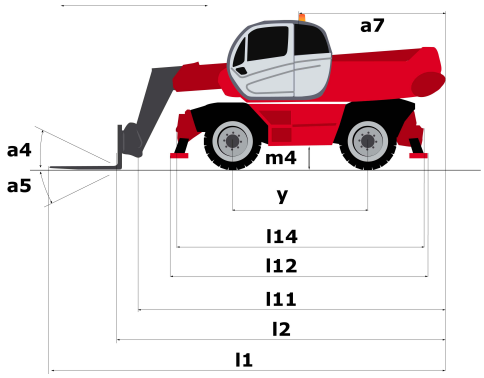

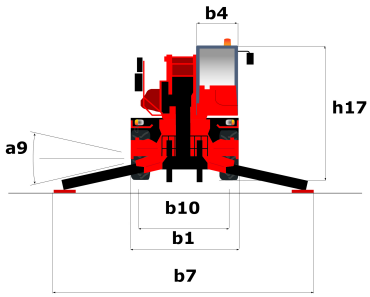

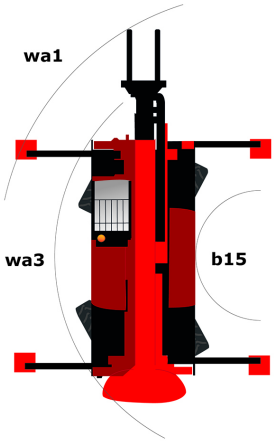

Other data	Metric
l11 - Overall length of fork carriage	7.75 m
l12 - Overall length at stabilisers	5.27 m
b7 - Overall width with stabilisers extended	6.25 m
b4 - Overall cab width	0.99 m
l14 - Length of frame	5.60 m
y - Wheelbase	3.25 m
a9 - Levelling corrector	7.40 °
a4 - Tilt-up angle	12.30 °
a5 - Tilt-down angle	108.70 °
b10 - Front wheel gauge (middle of wheels)	2.05 m
b11 - Rear wheel gauge (middle of wheels)	2.05 m
Wa1 - Outer turning radius (with forks)	6.50 m
b15- Inside turning radius	1.50 m

Load chart

Created on August 29, 2019 1:02 PM

Machine on tyres with forks

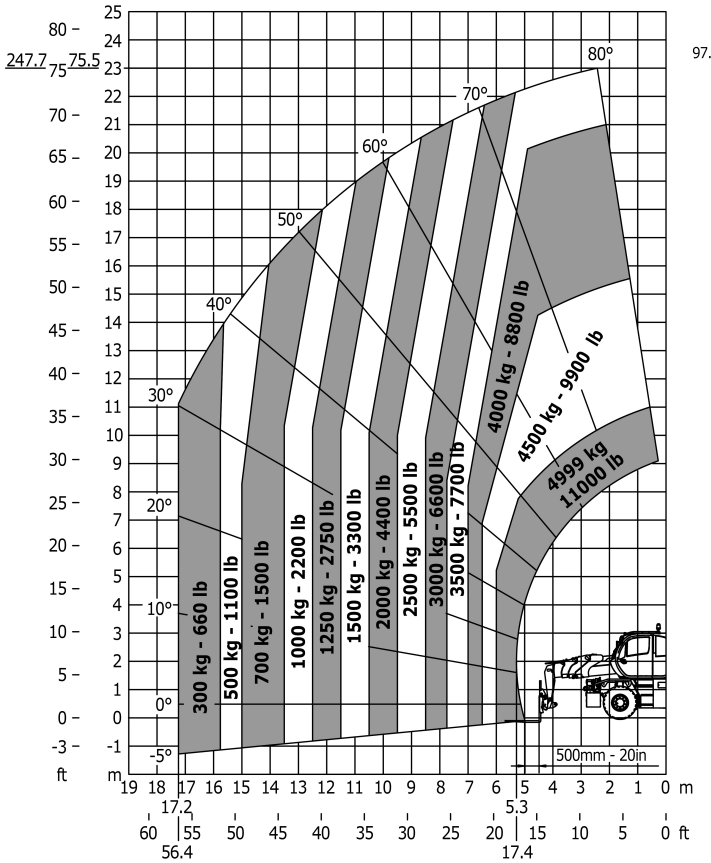

Rotation on lowered stabilisers with forks

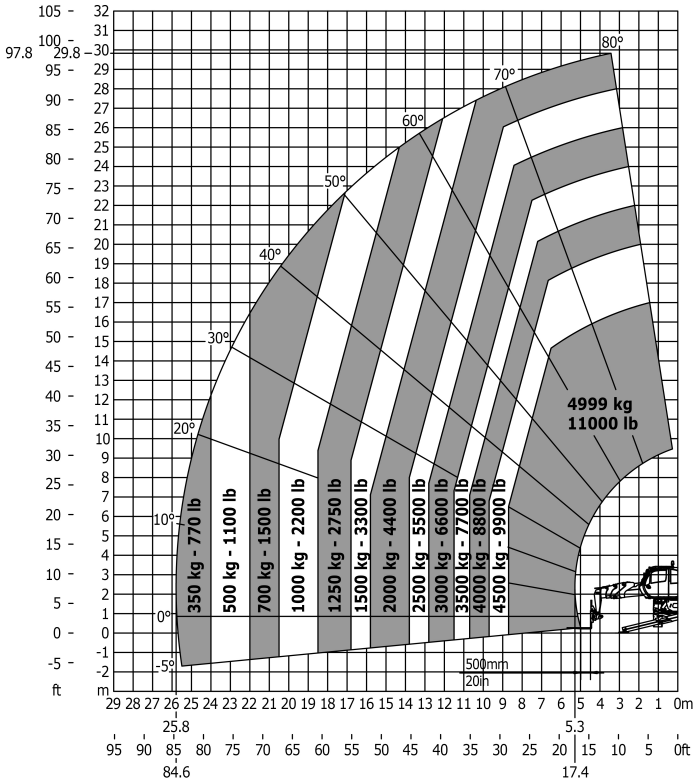

Rotation on lowered stabilisers with winch 5000 kg

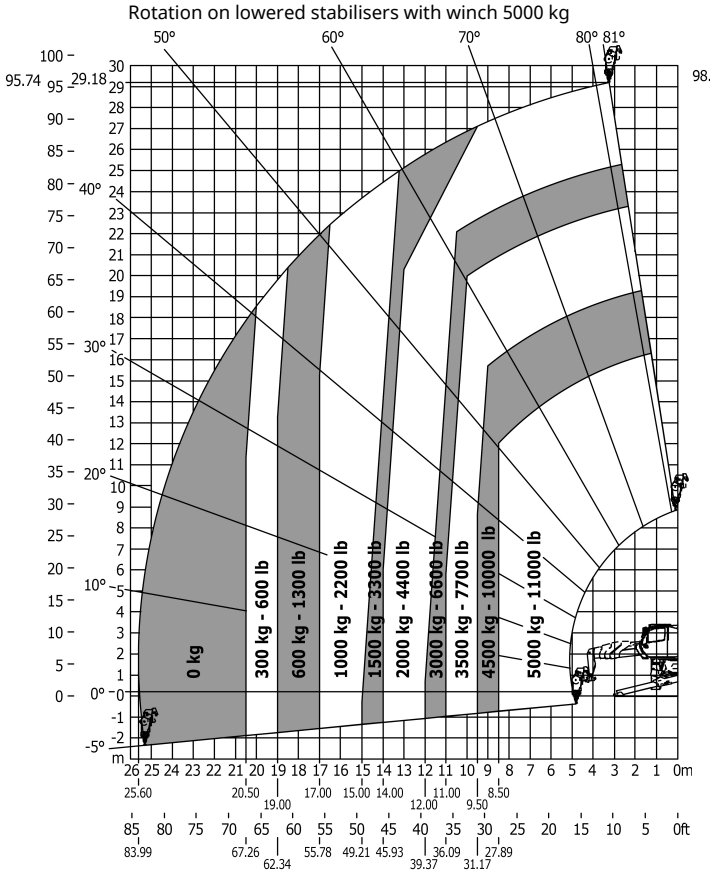

Rotation on lowered stabilisers with 1500 kg jib

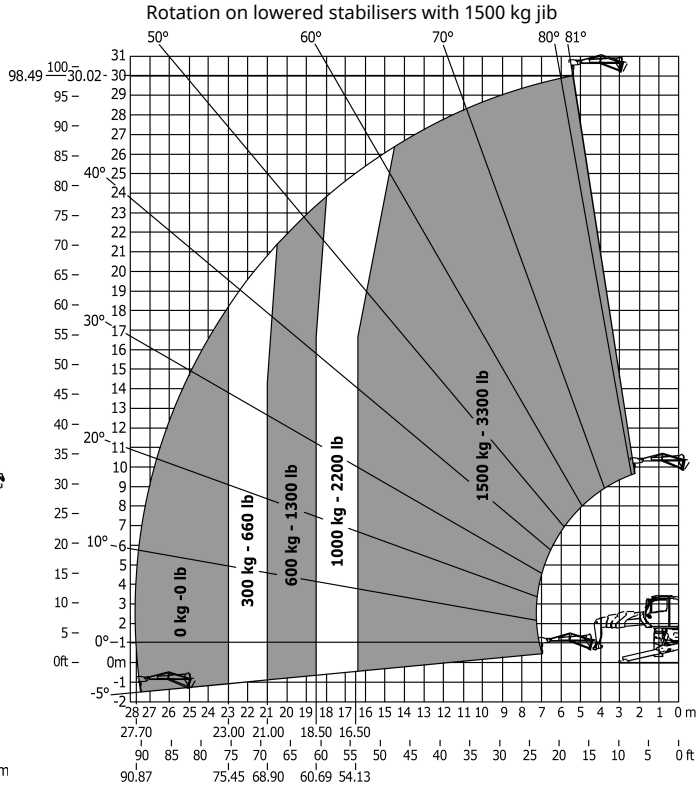

Rotation on lowered stabilisers with 365 kg platform

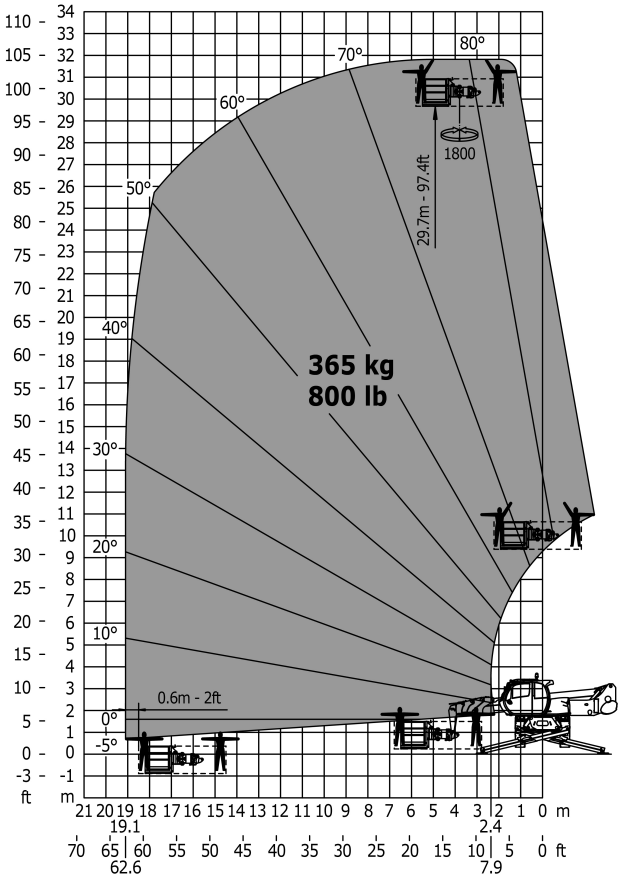

Rotation on lowered stabilisers with 1000 kg platform

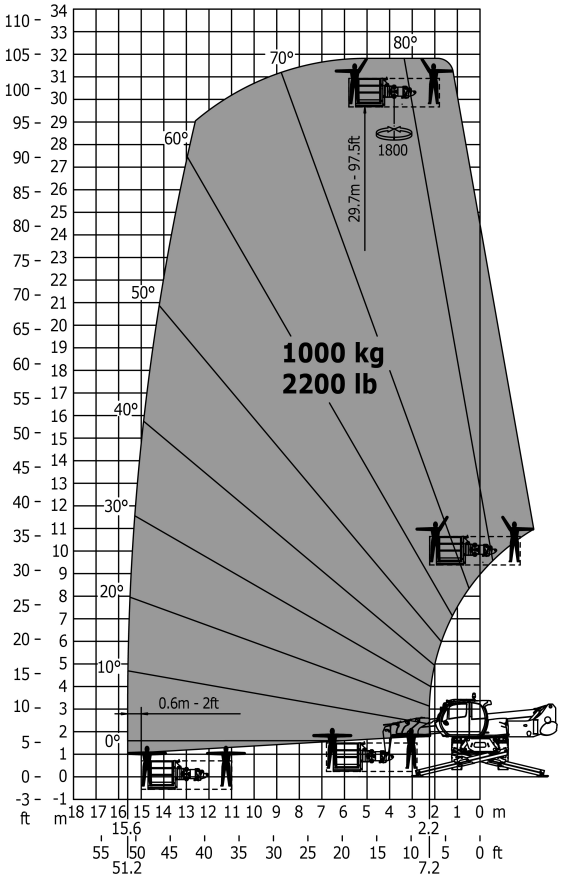

MANITOU
HANDLING YOUR WORLD

Siège Social
430 rue de l'Aubinière - 44150 Ancenis Cedex - France
Tel: +33(0)2 40 09 10 11 - Fax: +33 (0)2 40 09 10 97
www.manitou.com

This brochure describes versions and configuration options for Manitou products which may be fitted with different equipment. The equipment described in this brochure may be standard, optional or not available depending on version. Manitou reserves the right to change the specifications shown and described at any time and without prior warning. The manufacturer is not liable for the specifications given. For more information, contact your Manitou dealer. Non-contractual document. Product descriptions may differ from actual products. List of specifications is not comprehensive. The logos and visual identity of the company are the property of Manitou and may not be used without authorisation. All rights reserved. The photos and diagrams contained in thisbrochure are provided for information only.
MANITOU BF SA - Limited company with board of directors - Share capital: 39,547,824 euros - 857 802 508 RCS Nantes